SIEMENS

Edition 04/2022

Installation Manual

SIMATIC NET

Rugged Multi Service Platforms

RUGGEDCOM RX1512

https://www.siemens.com/ruggedcom

SIEMENS

SIMATIC NET

Rugged Multi Service Platforms RUGGEDCOM RX1512

Installation Manual

Preface

Introduction 1

Installing the Device 2

Device Management 3

Modules 4

Technical Specifications 5

Certification 6

04/2022

C79000-G8976-1057-22

Legal Information

Warning Notice System

This manual contains notices you have to observe in order to ensure your personal safety, as well as to prevent damage to property. The notices referring to your personal safety are highlighted in the manual by a safety alert symbol, notices referring only to property damage have no safety alert symbol. These notices shown below are graded according to the degree of danger.

⚠ DANGER
indicates that death or severe personal injury will result if proper precautions are not taken.

⚠ WARNING
indicates that death or severe personal injury may result if proper precautions are not taken.

⚠ CAUTION
indicates that minor personal injury can result if proper precautions are not taken.

⚠ NOTICE
indicates that property damage can result if proper precautions are not taken.

If more than one degree of danger is present, the warning notice representing the highest degree of danger will be used. A notice warning of injury to persons with a safety alert symbol may also include a warning relating to property damage.

Qualified Personnel

The product/system described in this documentation may be operated only by **personnel qualified** for the specific task in accordance with the relevant documentation, in particular its warning notices and safety instructions. Qualified personnel are those who, based on their training and experience, are capable of identifying risks and avoiding potential hazards when working with these products/systems.

Proper Use of Siemens Products

Note the following:

⚠ WARNING
Siemens products may only be used for the applications described in the catalog and in the relevant technical documentation. If products and components from other manufacturers are used, these must be recommended or approved by Siemens. Proper transport, storage, installation, assembly, commissioning, operation and maintenance are required to ensure that the products operate safely and without any problems. The permissible ambient conditions must be complied with. The information in the relevant documentation must be observed.

Trademarks

All names identified by ® are registered trademarks of Siemens Canada Ltd.. The remaining trademarks in this publication may be trademarks whose use by third parties for their own purposes could violate the rights of the owner.

Disclaimer of Liability

We have reviewed the contents of this publication to ensure consistency with the hardware and software described. Since variance cannot be precluded entirely, we cannot guarantee full consistency. However, the information in this publication is reviewed regularly and any necessary corrections are included in subsequent editions.

Digital Industries
Process Automation
300 Applewood Crescent
Concord, Ontario, L4K 4E5
Canada

C79000-G8976-1057-22
© 04/2022 Subject to change

Copyright © Siemens 2022
All rights reserved

Table of Contents

Preface ..... **v**
Related Documents v
SIMATIC NET Glossary v
Accessing Documentation v
Registered Trademarks v
Warranty vi
Training vi
Customer Support vii
Contacting Siemens vii

1 Introduction **1**
1.1 Feature Highlights 1
1.2 Description 1
1.3 Required Tools and Materials 3
1.4 Decommissioning and Disposal 3
1.5 Cabling Recommendations 3
1.5.1 Protection On Twisted-Pair Data Ports 4
1.5.2 Gigabit Ethernet 1000Base-TX Cabling Recommendations 4

2 Installing the Device **5**
2.1 General Procedure 6
2.2 Unpacking the Device 6
2.3 Mounting the Device 7
2.3.1 Mounting the Device on a DIN Rail 7
2.3.2 Mounting the Device to a Panel 8
2.4 Connecting the Failsafe Alarm Relay 9
2.5 Connecting Power 10
2.5.1 Connecting Low DC Power 11
2.5.2 Testing Dielectric Strength 14

3 Device Management **15**
3.1 Connecting to the Device 15
3.2 Configuring the Device 17
3.3 Accessing the CompactFlash Card 17

4 Modules **21**
4.1 Requirements and Restrictions 21
4.2 Available Modules 22
4.3 Installing/Removing Line Modules 22

5 Technical Specifications 25

5.1 Chassis Specifications 25

5.2 Power Supply Specifications 25

5.3 Failsafe Relay Specifications 25

5.4 Operating Environment 25

5.5 Mechanical Specifications 26

5.6 Dimension Drawings 26

6 Certification 29

6.1 Approvals 29

6.1.1 TÜV SÜD 29

6.1.2 European Union (EU) 29

6.1.3 FCC 31

6.1.4 FDA/CDRH 31

6.1.5 ISED 31

6.1.6 ISO 31

6.1.7 RoHS 31

6.1.8 Other Approvals 32

6.2 EMC and Environmental Type Tests 32

Preface

This guide describes the RUGGEDCOM RX1512. It describes the major features of the device, installation, commissioning and important technical specifications.

It is intended for use by network technical support personnel who are responsible for the installation, commissioning and maintenance of the device. It is also recommended for use by network and system planners, system programmers, and line technicians.

Related Documents

Other documents that may be of interest include:

Document Title	Link
RUGGEDCOM ROX CLI Configuration Manual	https://support.industry.siemens.com/cs/ww/en/view/109481699
RUGGEDCOM ROX Web Interface Configuration Manual	https://support.industry.siemens.com/cs/ww/en/view/109481700
RUGGEDCOM Modules Catalog for RX1500 Series	https://support.industry.siemens.com/cs/ww/en/view/109747072
RUGGEDCOM SFP Transceivers Catalog	https://support.industry.siemens.com/cs/ww/en/view/109482309

SIMATIC NET Glossary

The SIMATIC NET Glossary describes special terms that may be used in this document.

The glossary is available online via Siemens Industry Online Support (SIOS) at:

https://support.industry.siemens.com/cs/ww/en/view/50305045

Accessing Documentation

The latest user documentation for RUGGEDCOM RX1512 is available online at https://support.industry.siemens.com. To request or inquire about a user document, contact Siemens Customer Support.

Registered Trademarks

RUGGEDCOM®, ROS®, RCDP®, and RUGGEDCOM Discovery Protocol® are registered trademarks of Siemens Canada Ltd.

Linux® is the registered trademark of Linus Torvalds in the United States and other countries.

The registered trademark Linux® is used pursuant to a sublicense from LMI, the exclusive licensee of Linus Torvalds, owner of the mark on a world-wide basis.

Other designations in this manual might be trademarks whose use by third parties for their own purposes would infringe the rights of the owner.

Warranty

Siemens warrants this product for a period of five (5) years from the date of purchase, conditional upon the return to factory for maintenance during the warranty term. This product contains no user-serviceable parts. Attempted service by unauthorized personnel shall render all warranties null and void. The warranties set forth in this article are exclusive and are in lieu of all other warranties, performance guarantees and conditions whether written or oral, statutory, express or implied (including all warranties and conditions of merchantability and fitness for a particular purpose, and all warranties and conditions arising from course of dealing or usage or trade). Correction of nonconformities in the manner and for the period of time provided above shall constitute the Seller's sole liability and the Customer's exclusive remedy for defective or nonconforming goods or services whether claims of the Customer are based in contract (including fundamental breach), in tort (including negligence and strict liability) or otherwise.

For warranty details, visit https://www.siemens.com or contact a Siemens customer service representative.

Training

Siemens offers a wide range of educational services ranging from in-house training of standard courses on networking, Ethernet switches and routers, to on-site customized courses tailored to the customer's needs, experience and application.

Siemens' Educational Services team thrives on providing our customers with the essential practical skills to make sure users have the right knowledge and expertise to understand the various technologies associated with critical communications network infrastructure technologies.

Siemens' unique mix of IT/Telecommunications expertise combined with domain knowledge in the utility, transportation and industrial markets, allows Siemens to provide training specific to the customer's application.

For more information about training services and course availability, visit https://www.siemens.com or contact a Siemens Sales representative.

Customer Support

Customer support is available 24 hours, 7 days a week for all Siemens customers. For technical support or general information, contact Siemens Customer Support through any of the following methods:

Online

Visit http://www.siemens.com/automation/support-request to submit a Support Request (SR) or check on the status of an existing SR.

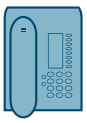

Telephone

Call a local hotline center to submit a Support Request (SR). To locate a local hotline center, visit https://w3.siemens.com/aspa_app/?lang=en.

Mobile App

Install the Industry Online Support app by Siemens AG on any Android, Apple iOS or Windows mobile device and be able to:

- Access Siemens' extensive library of support documentation, including FAQs and manuals
- Submit SRs or check on the status of an existing SR
- Contact a local Siemens representative from Sales, Technical Support, Training, etc.
- Ask questions or share knowledge with fellow Siemens customers and the support community

Contacting Siemens

Address	Siemens Canada Ltd. Digital Industries Process Automation 300 Applewood Crescent Concord, Ontario Canada, L4K 5C7
Telephone	Toll-free: 1 888 264 0006 Tel: +1 905 856 5288 Fax: +1 905 856 1995
E-Mail	info.ruggedcom@siemens.com
Web	https://www.siemens.com

1 Introduction

The RUGGEDCOM RX1512 is a cost-efficient, rugged Layer 3 switch and router. The RUGGEDCOM RX1512's modular and field replaceable platform can be equipped with WAN, serial, and Ethernet options, making it ideally suited for electric power utilities, the industrial plant floor, and traffic control systems. The appliance's compact form factor makes it ideal for pole mount applications or installation in restricted spaces.

The RUGGEDCOM RX1512 is designed to provide a high level of immunity to electromagnetic interference (EMI) and heavy electrical surges typical of the harsh environments found in many industrial applications. An operating temperature range of -40 to 85 °C (-40 to 185 °F) allows the RUGGEDCOM RX1512 to be placed in almost any location.

1.1 Feature Highlights

Reliability in Harsh Environments

- Immunity to EMI and high voltage electrical transients
- -40 to 85 °C (-40 to 185 °F) operating temperature (no fans)
- Failsafe output relay for critical failure or error alarming

Universal Power Supply Options

- Fully integrated power supply (no external adapter)
- Input voltage range: 11-72 VDC
- CSA/UL 62368-1 safety approved to 85 °C (185 °F)

Physical Ports

- Field replaceable line modules
- Up to 12 100Base-FX ports
- Up to 12 10/100Base-TX ports
- Up to 6 10Base-FL/100Base-SX ports
- Up to 4 Gigabit Ethernet ports
- Up to 12 serial ports
- Up to 4 T1/E1 RJ48C ports or 2 E1 BNC ports
- Up to 2 DDS (Digital Data Services) ports
- Up to 8 active cellular data interfaces

1.2 Description

The RUGGEDCOM RX1512 features various ports, controls and indicator LEDs on the front panel for connecting, configuring and troubleshooting the device.

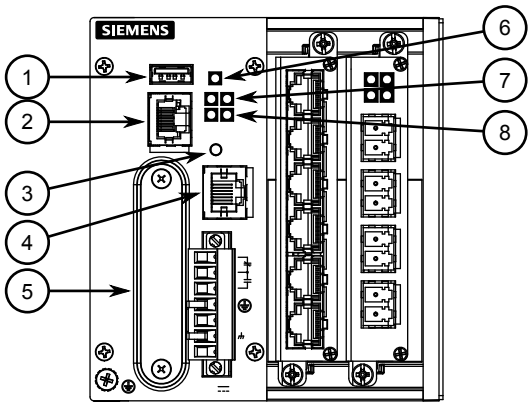

① Utility USB Port
② RS232 Serial Console Port (RJ45)
③ Lamp Test/Alarm Cut-Off (LT/ACO) Button
④ Management Port
⑤ Compact Flash Card Port
⑥ Alarm Indicator LED
⑦ Power Status LEDs
⑧ Port Status LEDs

Figure 1.1 RUGGEDCOM RX1512

Management Port	This 10/100Base-T Ethernet port is used for system management that is out-of-band from the switch fabric.
RS-232 Serial Console Port	The serial console port is for interfacing directly with the device and accessing initial management functions. For information about connecting to the device via the serial console port, refer to "Connecting to the Device (Page 15)".
Utility USB Port	Use the USB port to upgrade the RUGGEDCOM RX1512 software or install files, such as configuration files and feature key files. For more information, refer to the "RUGGEDCOM ROX Configuration Manual" for the RUGGEDCOM RX1512.
Lamp Test/Alarm Cut-Off (LT/ACO) Button	This button performs two functions: • Press and hold this button to test all indicator LEDs • Press and release this button to acknowledge an active alarm
Power Status LEDs	Indicates the status of the power modules. • I = The power module is receiving power • O = The power module is supplying power
Port Status LEDs	Indicates when ports are active. • Green = OK • Orange = Warning alert • Red = Configuration error
Alarm Indicator LED	Indicates when an alarm condition exists. • Green = Alarms cleared/acknowledged • Red = Alarm
Compact Flash Card Port	Houses the CompactFlash (CF) card that contains active and backup installations of RUGGEDCOM RUGGEDCOM RX1512, along with the configuration database and other system data. For more

information, refer to "Accessing the CompactFlash Card (Page 17)".

1.3 Required Tools and Materials

The following tools and materials are required to install the RUGGEDCOM RX1512:

Tools/Materials	Purpose
AC/DC power cord (16 AWG)	For connecting power to the device.
Lightning protector	For protecting the device from harmful electrical strikes.
Shielded coaxial cables	For connecting the device to antennas and an Ethernet network.
SIM Card(s) provided by the network carrier	For accessing a network carrier's cellular network. Required only if a cellular modem module is equipped.
Flathead screwdriver	For mounting the device to a DIN rail.
Phillips screwdriver	For mounting the device to a panel.
4 x #6-32 screws	For mounting the device to a panel.
Braided or equivalent ground wire	For grounding the device to safety Earth.

1.4 Decommissioning and Disposal

Proper decommissioning and disposal of this device is important to prevent malicious users from obtaining proprietary information and to protect the environment.

Decommissioning

This device may include sensitive, proprietary data. Before taking the device out of service, either permanently or for maintenance by a third-party, make sure it has been fully decommissioned.

For more information, refer to the associated "Configuration Manual".

Recycling and Disposal

For environmentally friendly recycling and disposal of this device and related accessories, contact a facility certified to dispose of waste electrical and electronic equipment. Recycling and disposal must be done in accordance with local regulations.

1.5 Cabling Recommendations

Siemens recommends using SIMATIC NET industrial Ethernet shielded cables for all Ethernet ports.

1.5.1 Protection On Twisted-Pair Data Ports

All copper Ethernet ports on RUGGEDCOM products include transient suppression circuitry to protect against damage from electrical transients and conform with IEC 61850-3 and IEEE 1613 Class 1 standards. This means that during a transient electrical event, communications errors or interruptions may occur, but recovery is automatic.

Siemens also does not recommend using copper Ethernet ports to interface with devices in the field across distances that could produce high levels of ground potential rise (i.e. greater than 2500 V), during line-to-ground fault conditions.

1.5.2 Gigabit Ethernet 1000Base-TX Cabling Recommendations

The IEEE 802.3ab Gigabit Ethernet standard defines 1000 Mbit/s Ethernet communications over distances of up to 100 m (328 ft) using all 4 pairs in category 5 (or higher) balanced, unshielded twisted-pair cabling. For wiring guidelines, system designers and integrators should refer to the Telecommunications Industry Association (TIA) TIA/EIA-568-A wiring standard that characterizes minimum cabling performance specifications required for proper Gigabit Ethernet operation. For reliable, error-free data communication, new and pre-existing communication paths should be verified for TIA/EIA-568-A compliance.

The following table summarizes the relevant cabling standards:

Cabling Category	1000Base-TX Compliant	Required Action
< 5	No	New wiring infrastructure required.
5	Yes	Verify TIA/EIA-568-A compliance.
5e	Yes	No action required. New installations should be designed with Category 5e or higher.
6	Yes	No action required.
> 6	Yes	Connector and wiring standards to be determined.

Follow these recommendations for copper data cabling in high electrical noise environments:

- Data cable lengths should be as short as possible, preferably 3 m (10 ft) in length. Copper data cables should not be used for inter-building communications.
- Power and data cables should not be run in parallel for long distances, and should be installed in separate conduits. Power and data cables should intersect at 90° angles when necessary to reduce inductive coupling.

Installing the Device

2

This chapter describes how to install the device, including mounting the device, connecting power, and connecting the device to the network.

⚠ **DANGER**

Electrocution hazard – risk of serious personal injury and/or damage to equipment.

Before performing any maintenance tasks, make sure all power to the device has been disconnected and wait approximately two minutes for any remaining energy to dissipate.

⚠ **WARNING**

Radiation hazard – risk of serious personal injury.

This product contains a laser system and is classified as a *CLASS 1 LASER PRODUCT*. Use of controls or adjustments or performance of procedures other than those specified herein may result in hazardous radiation exposure.

⚠ **WARNING**

Radiation hazard – risk of Radio Frequency (RF) exposure.

This device is compliant with the requirements set forth in FCC 47 CFR, section 1.1307, addressing Radio Frequency (RF) exposure from radio frequency base stations, as defined in FCC OET Bulletin 65 [http://transition.fcc.gov/Bureaus/Engineering_Technology/Documents/bulletins/oet65/oet65.pdf]. The emitted radiation should be as little as possible. To achieve minimum RF exposure, install the device when it is configured not to transmit and set it to operational mode remotely, rather than having a technician enable transmission on-site. For maintenance of the base station, or other operations which require RF exposure, the exposure should be minimized in time and according to the regulations set forth by the country of installation or the Federal Communications Commission (FCC).

⚠ **CAUTION**

Burn hazard – risk of personal injury

The surface of the device may be hot during operation, or as a result of the ambient air temperature.

Wear appropriate personal protective equipment and use caution when working with or around the device.

⚠ NOTICE

This product contains no user-serviceable parts. Attempted service by unauthorized personnel shall render all warranties null and void.

Changes or modifications not expressly approved by Siemens Canada Ltd. could invalidate specifications, test results, and agency approvals, and void the user's authority to operate the equipment.

⚠ NOTICE

This product should be installed in a *restricted access location* where access can only be gained by authorized personnel who have been informed of the restrictions and any precautions that must be taken. Access must only be possible through the use of a tool, lock and key, or other means of security, and controlled by the authority responsible for the location.

2.1 General Procedure

The general procedure for installing the device is as follows:

Note
The user is responsible for the operating environment of the device, including maintaining the integrity of all protective conductor connections and checking equipment ratings. Make sure to review all operating and installation instructions before commissioning or performing maintenance on the device.

1. Review the relevant certification information for any regulatory requirements. For more information, refer to "Approvals (Page 29)".
2. Review the "RUGGEDCOM RX1500 Series Modules Catalog" for special installation or regulatory requirements related to the modules installed in the device. In the case of cellular modem line modules, this includes antenna installation and regulatory requirements.
3. Mount the device.
4. Connect the failsafe alarm relay.
5. Connect power to the device and ground the device to safety Earth.
6. Connect the device to the network.
7. Configure the device.

2.2 Unpacking the Device

When unpacking the device, do the following:

1. Inspect the package for damage before opening it.
2. Visually inspect each item in the package for any physical damage.

3. Verify all items are included.

Note
If any item is missing or damaged, contact Siemens for assistance.

2.3 Mounting the Device

The RUGGEDCOM RX1512 is designed for maximum mounting and display flexibility. It can be equipped with connectors that allow it to be installed in a 35 mm (1.4 in) DIN rail, or directly on a panel.

⚠ NOTICE

Heat generated by the device is channeled outwards from the enclosure. As such, it is recommended that 2.5 cm (1 in) of space be maintained on all open sides of the device to allow for some convectional airflow.

Forced airflow is not required. However, any increase in airflow will result in a reduction of ambient temperature and improve the long-term reliability of all equipment mounted in the rack space.

Note
For detailed dimensions of the device with either DIN rail or panel hardware installed, refer to "Dimension Drawings (Page 26)".

2.3.1 Mounting the Device on a DIN Rail

For DIN rail installations, the RUGGEDCOM RX1512 can be equipped with panel/DIN rail adapters pre-installed on each side of the chassis. The adapters allow the device to be slid onto a standard 35 mm (1.4 in) DIN rail.

To mount the device to a DIN rail, do the following:

1. Align the adapters with the DIN rails and slide the device into place.

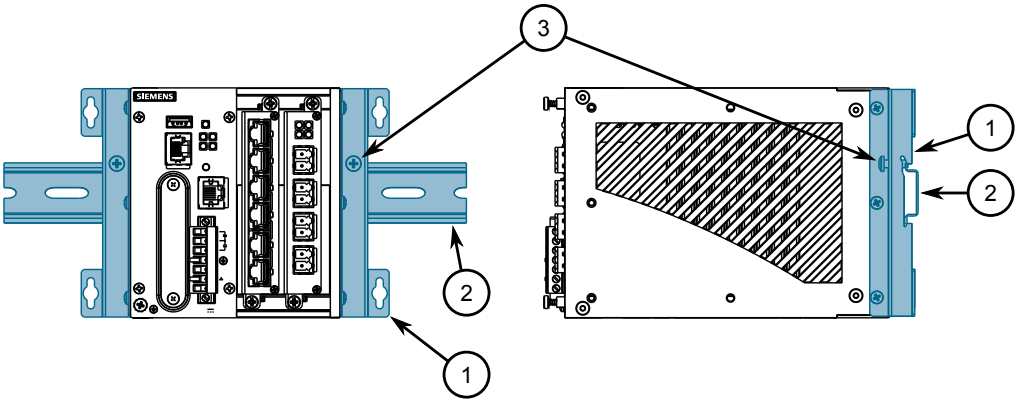

① Panel/DIN Rail Adapter
② DIN Rail
③ Screw

Figure 2.1 DIN Rail Mounting

2. Install one of the supplied screws on either side of the device to secure the adapters to the DIN rails.

2.3.2 Mounting the Device to a Panel

For panel installations, the RUGGEDCOM RX1512 can be equipped with panel/DIN rail adapters pre-installed on each side of the chassis. The adapters allow the device to be attached to a panel using screws.

To mount the device to a panel, do the following:

1. Place the device against the panel and mark the mounting holes on the panel.

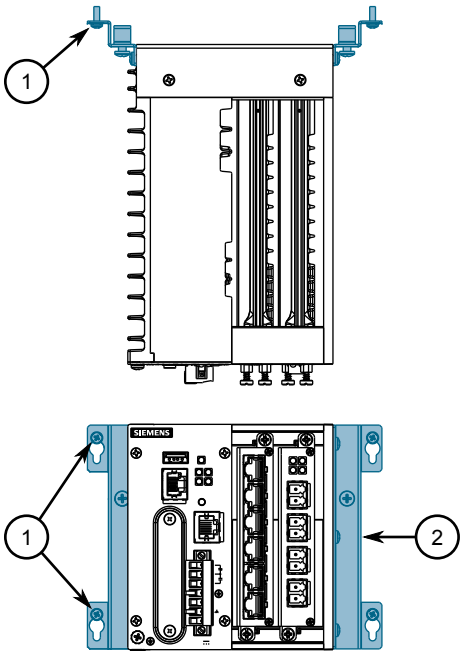

① Screw
② Panel/DIN Rail Adapter

Figure 2.2 Panel Mounting

2. Prepare the mounting holes
3. Align the device with the mounting holes and secure it to the panel.

2.4 Connecting the Failsafe Alarm Relay

The failsafe relay can be configured to latch based on alarm conditions. The NO (Normally Open) contact is closed when the unit is powered and there are no active alarms. If the device is not powered or if an active alarm is configured, the relay opens the NO contact and closes the NC (Normally Closed) contact.

Note
Control of the failsafe relay output is configurable through RUGGEDCOM RX1512. One common application for this relay is to signal an alarm if a power failure occurs. For more information, refer to the "RUGGEDCOM ROX Configuration Manual" for the RUGGEDCOM RX1512.

The following shows the proper relay connections.

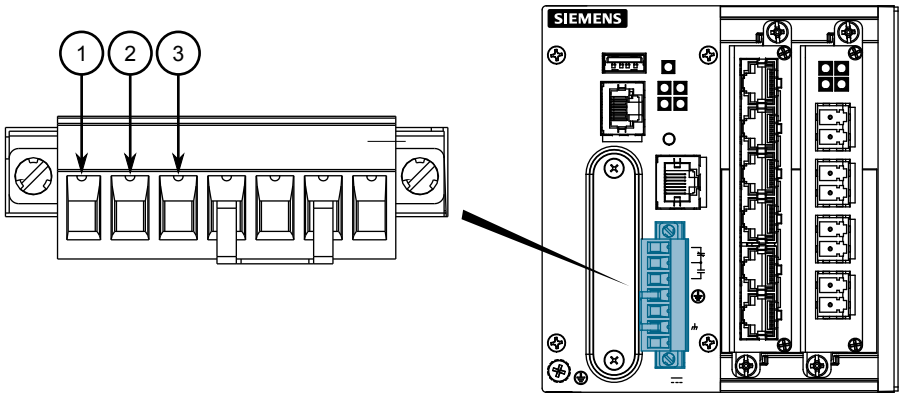

① Normally Closed
② Common
③ Normally Open

Figure 2.3 Failsafe Alarm Relay Wiring

2.5 Connecting Power

The RUGGEDCOM RX1512 supports a single low DC power source.

⚠ DANGER

Electrocution hazard – risk of serious personal injury or death

Make sure all power sources are off before servicing the power module terminals.

Make sure the power source is off before servicing the power terminal.

⚠ NOTICE

- Use minimum #16 gage copper wiring when connecting terminal blocks.
- The maximum wire length between the terminal block and power source must not exceed 6 m (20 ft) for 24 V power supplies or 18 m (60 ft) for 48 V power supplies.
- For 125/230 VAC rated equipment, an appropriately rated AC circuit breaker must be installed.
- For 125/250 VDC rated equipment, an appropriately rated DC circuit breaker must be installed.
- Equipment must be installed according to applicable local wiring codes and standards.

2.5.1 Connecting Low DC Power

To connect a low DC power supply to the device, do the following:

⚠ **NOTICE**

Electrical hazard – risk of damage to equipment

Do not connect AC power cables to a 12, 24 or 48 VDC power supply terminal block. Damage to the power supply may occur.

⚠ **NOTICE**

Electrical hazard – risk of damage to equipment

In normal operation, the jumper between the chassis ground and surge ground terminals must be installed for proper operation. Damage to the device may occur otherwise. Removing the jumper may also void the warranty.

Note
The RUGGEDCOM RX1512 works with both positive VDC power supplies and negative VDC power supplies.

Note
For information about how to safely test the dielectric strength of the device, refer to "Testing Dielectric Strength (Page 14)".

1. Connect the power supply terminal block to the device.

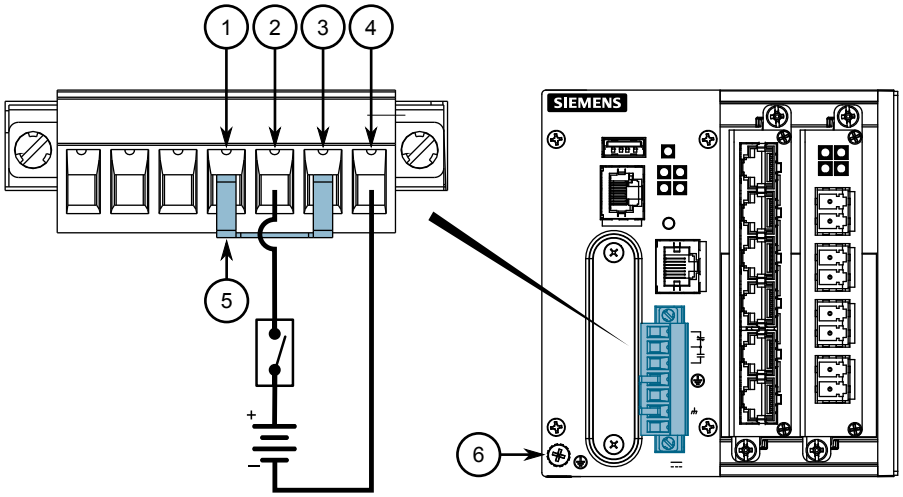

① Surge Ground Terminal
② Positive (+) Terminal
③ Chassis Ground Terminal
④ Negative (-) Terminal
⑤ Jumper
⑥ Chassis Ground Connection

Figure 2.4 DC Terminal Block Wiring for Positive VDC Power Supplies

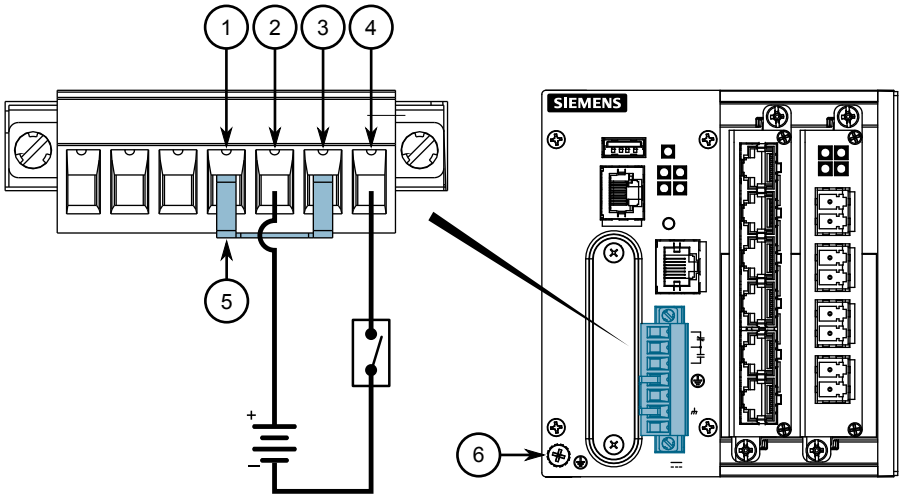

① Surge Ground Terminal
② Positive (+) Terminal
③ Chassis Ground Terminal
④ Negative (-) Terminal
⑤ Jumper
⑥ Chassis Ground Connection

Figure 2.5 DC Terminal Block Wiring for Negative VDC Power Supplies

Note
For secure, reliable connections under severe shock or vibration, use M3.5 ring lugs with a maximum outer diameter of 7 mm (0.28 in). Make sure no bare metal is exposed beyond the safety cover.

2. Connect the positive wire from the power source to the positive (+) terminal on the terminal block.
3. Connect the negative wire from the power source to the negative (-) terminal on the terminal block.
4. Install a jumper between the surge ground terminal and chassis ground terminal. The surge ground terminal is used as the ground conductor for all surge and transient suppression circuitry internal to the unit.
5. Using a #10 ring lug and #10-32 screw, secure a ground wire (or bond point) to the chassis ground connection on the device. Make sure the lug is tightened to 1.1 N·m (9.5 lbf·in).

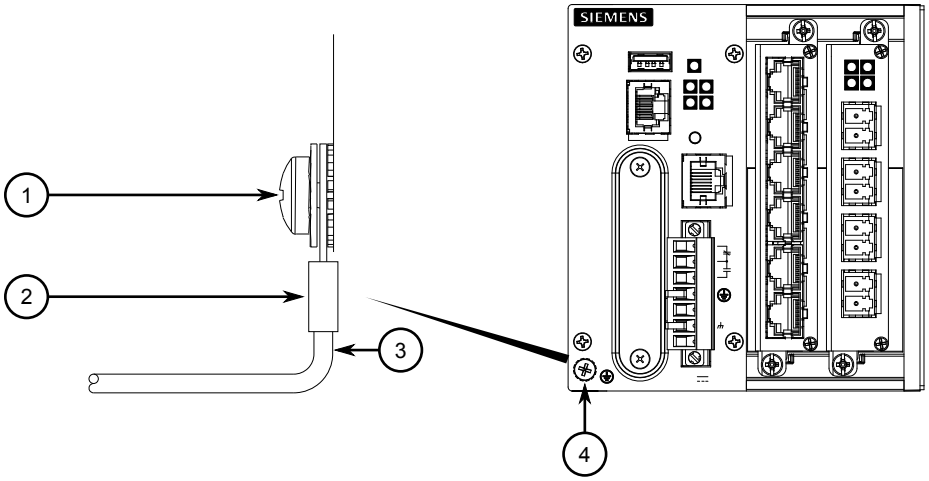

① #10 Ring Lug
② #10-32 Screw
③ Connection from External Power Source
④ Chassis Ground Connection

Figure 2.6 Chassis Ground Connection

6. Install the safety cover over the terminal block. **This is mandatory for 48 VDC and -48 VDC power supplies.**

2.5.2 Testing Dielectric Strength

Before performing any dielectric strength or HIPOT (High Potential) testing on the RUGGEDCOM RX1512 in the field, do the following:

⚠ NOTICE

Electrical hazard – risk of damage to equipment

Before testing the dielectric strength (HIPOT), remove the metal jumper. Damage to equipment may occur.

Note
In normal operation, the jumper between the chassis ground and surge ground terminals must be installed for proper operation. Removing the jumper may void the warranty.

1. Remove the metal jumper that connects surge ground terminal and the chassis ground terminal. This metal jumper connects transient suppression circuitry to chassis ground and must be removed in order to avoid damage to transient suppression circuitry during testing.

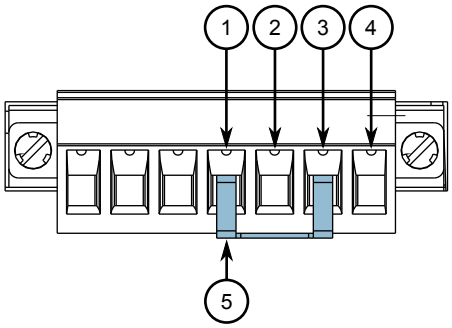

① Surge Ground Terminal
② Positive (+) Terminal
③ Chassis Ground Terminal
④ Negative (-) Terminal
⑤ Jumper
⑥ Chassis Ground Connection

Figure 2.7 Jumper

2. Connect one terminal from the HIPOT tester to the positive terminal and the negative terminal. Connect the second terminal of the HIPOT tester to chassis ground terminal. Do not connect the HIPOT tester to surge ground terminal.
3. Following the test, install the metal jumper between the surge ground terminal and the chassis ground terminal.

Device Management

3

This section describes how to connect to and manage the device.

3.1 Connecting to the Device

The following describes the various methods for accessing the RUGGEDCOM RX1512 console and Web interfaces on the device. For more detailed instructions, refer to the "RUGGEDCOM ROX Configuration Manual" for the RUGGEDCOM RX1512.

⚠ **NOTICE**

Intermittent LINK DOWN Alarms and RJ45 Connectors

Intermittent LINK DOWN alarms may be caused by an improper physical connection at an RJ45 port. If intermittent LINK DOWN alarms are experienced on an RJ45 port, consider the RJ45 cable in use. On some RJ45 connectors, the slots on the connector where the contacts connect is too short, causing the connector pins in the port to lift before a proper connection is made. It is determined the minimum slot length must be 5.5 mm (0.216 in).

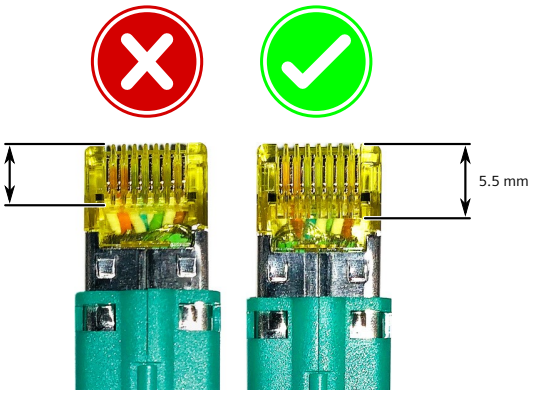

Adjusting the position of the connector in the port, either by wiggling or pulling the connector back, corrects the issue temporarily, but is not recommended. It may cause damage to the contact pins of the RJ45 ports. For a permanent solution, use Siemens 6XV1870-3Qxxx certified cables (manufactured December 2019 or after) or equivalent.

Siemens recommends using Siemens certified cables and connectors for Siemens RUGGEDCOM products. Contact your Siemens RUGGEDCOM representative for more details.

Serial Console and Management Ports

Connect a workstation directly to the serial console or management ports to access the boot-time control and RUGGEDCOM RX1512 interfaces. The serial console port provides access to RUGGEDCOM RX1512's console interface, while the management port provides access to RUGGEDCOM RX1512's console and Web interfaces.

Connection to the console port is made using an RJ-45-to-DB9 console cable. The following is the pin-out for the console port:

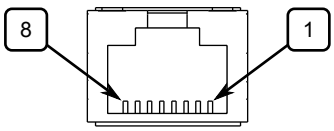

Figure 3.1 RJ-45 Console Port Pin Configuration

Pin		Name	Description
RJ-45 Male	DB9 Female		
1	6	DSR[a]	Data Set Ready
2	1	Reserved (Do Not Connect)	
3	4	DTR[a]	>Data Terminal Ready
4	5	GND	Signal Ground
5	2	RxD	Receive Data (to DTE)
6	3	TxD	Transmit Data (from DTE)
7	8	CTS[b]	Clear to Send
8	7	RTS[b]	>Read to Send
	9	RI[c]	Ring Indicator

[a] The DSR, DCD and DTR pins are connected together internally.
[b] The CTS and RTS pins are connected together internally.
[c] RI is not connected.

For information about how to connect to the device via the serial console port, refer to the "RUGGEDCOM ROX CLI Configuration Manual" for the RUGGEDCOM RX1512.

For information about how to connect to the device via the management port, refer to either the "RUGGEDCOM ROX Web Interface Configuration Manual" or the "RUGGEDCOM ROX CLI Configuration Manual" for the RUGGEDCOM RX1512.

The management port is a 10/100Base-TX copper Ethernet port with an RJ-45 connector. The following is the pin-out for the management port:

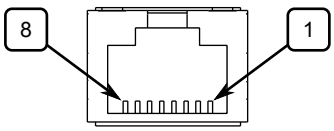

Figure 3.2 RJ-45 Management Port

Pin	Name	Description
1	RX+	Receive Data+
2	RX-	Receive Data-
3	TX+	Transmit Data+
4	Reserved (Do Not Connect)	
5	Reserved (Do Not Connect)	
6	TX-	Transmit Data-
7	Reserved (Do Not Connect)	
8	Reserved (Do Not Connect)	

Communication Ports

Connect any of the available Ethernet ports on the device to a management switch and access the RUGGEDCOM RX1512 console and Web interfaces via the device's IP address. The factory default IP address for the RUGGEDCOM RX1512 is https://192.168.0.2.

For more information about available ports, refer to "*Modules* (Page 21)".

Note
Single-mode fiber ports only support Ultra Physical Contact (UPC) cable connectors.

3.2 Configuring the Device

Once the device is installed and connected to the network, it must be configured. All configuration management is done via the RUGGEDCOM RX1512 interface. For more information about configuring the device, refer to the "RUGGEDCOM ROX Configuration Manual" associated with the installed software release.

3.3 Accessing the CompactFlash Card

The RUGGEDCOM RX1512 features a removable CompactFlash (CF) card that stores configuration files, firmware (active and backup versions), file-based feature keys and other system files.

⚠ **NOTICE**

Configuration hazard – risk of data corruption/loss

Do not remove or insert the CF card when the device is powered on.

The CF card should only be removed in the following scenarios:

- The chassis is defective (with the exception of power and media modules)
- The CF card is deemed defective or corrupt
- The device is rendered non-functional due to a serious configuration error, data corruption, or hardware fault

⚠ **NOTICE**

Configuration hazard – risk of data corruption/loss

The following will void the warranty and potentially result in configuration data corruption/loss:

- Using a CF card not approved by Siemens for use with this device
- Removing the CF card in any scenario other than those described in this section

Inserting the CF card

To insert the CF card into the device, do the following:

⚠ NOTICE
The device should only be powered on when the CF card is present.

1. Make sure the device is powered down.
2. Remove the CF card access panel.
3. Insert the CF card into the slot until it is fully seated.

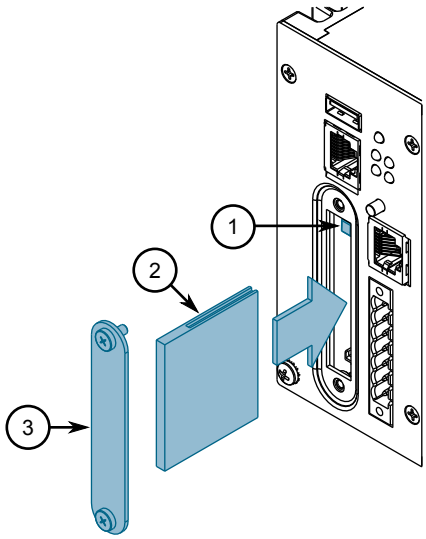

① CompactFlash Card
② Access Panel

Figure 3.3 Inserting the CF Card

4. Secure the CF card access panel to the chassis.

Removing the CF card

To remove the CF card from the device, do the following:

1. Make sure the device is powered down.

2. Remove the CF card access panel.

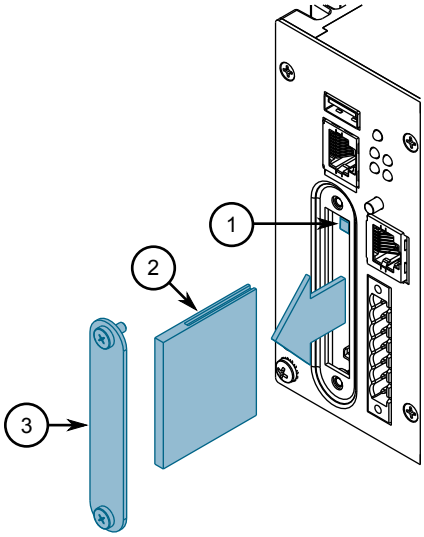

① Ejector Button
② CompactFlash Card
③ Access Panel

Figure 3.4 Removing the CF Card

3. Press the ejector button to the left of the CF card and then pull the card out.
4. Secure the CF card access panel to the chassis.

Modules

4

The RUGGEDCOM RX1512 features slots for up to two field-replaceable line modules, which can be used to expand and customize the capabilities of the device to suit specific applications.

A variety of modules are available, each featuring a specific type of communication port: copper Ethernet, fiber optic Ethernet, SFP, WAN, cellular modem and DDS. The RUGGEDCOM APE (Application Processing Engine) line module, a utility-grade computing platform for running third-party applications directly from within the RUGGEDCOM RX1512, is also available.

Use the RUGGEDCOM ROX software to determine which ports are equipped on the device. For more information, refer to the "RUGGEDCOM ROX Configuration Manual" for the device.

4.1 Requirements and Restrictions

Before installing modules in the device, consider the following restrictions and requirements.

Module Support

- Only one T1/E1 WAN module or up to two DDS modules are supported
- Only one RUGGEDCOM APE module is supported

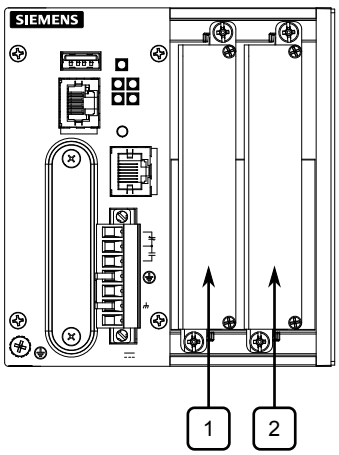

Figure 4.1 Available Chassis Slots

4.2 Available Modules

A variety of modules are available for use with the RUGGEDCOM RX1512.

For more information, refer to the "RUGGEDCOM Modules Catalog [https://support.industry.siemens.com/cs/us/en/view/109747072]" for the RUGGEDCOM RX1512.

4.3 Installing/Removing Line Modules

Upon installing a new line module in the device, all features associated with the module are available in RUGGEDCOM RX1512. For more information, refer to the "RUGGEDCOM ROX Configuration Manual" for the RUGGEDCOM RX1512.

Once a line module is removed, all the features associated with the module are hidden or disabled in RUGGEDCOM RX1512.

⚠ **NOTICE**

Electrical hazard – risk of power failure

Do not install more than one RUGGEDCOM APE module. Installing more than one of this type of module can lead to power fluctuations and irregular shut downs.

⚠ **NOTICE**

Contamination hazard – risk of equipment damage

Prevent the ingress of water, dirts and other debris that may lead to premature equipment failure. Always make sure slots are not left empty and open ports are protected with plugs or covers.

Note
Only one WAN line module is supported per chassis.

Removing a Module

To remove a line module, do the following:

1. [Optional] If the device is installed in a rack, remove it from the rack.
2. Loosen the screws that secure the module.

3. Pull the module from the chassis to disconnect it.

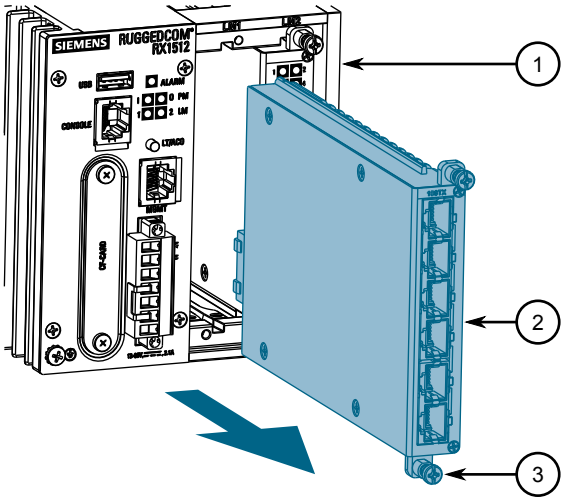

① Module
② Chassis
③ Screw

Figure 4.2 Removing a Module

4. Install a new module or a blank module (to prevent the ingress of dust and dirt).
5. [Optional] If necessary, install the device in the rack.

Installing a Module

To install a line module, do the following:

1. [Optional] If the device is installed in a rack, remove it from the rack.
2. Remove the current module from the slot.

3. Insert the new module into the slot.

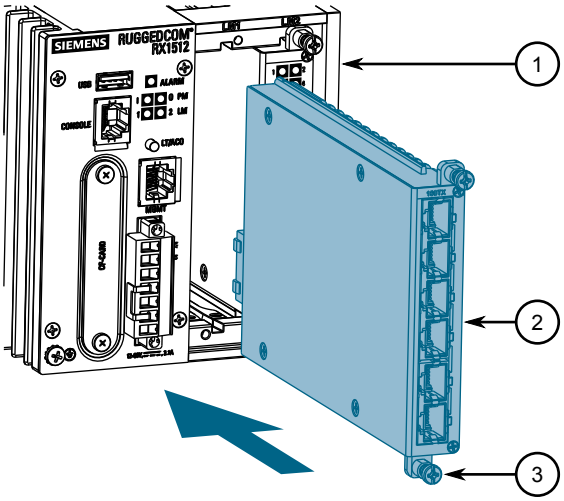

① Module
② Chassis
③ Screw

Figure 4.3 Installing a Module

4. Tighten the screws to secure the module.
5. [Optional] If necessary, install the device in the rack.

Technical Specifications

5

This section provides important technical specifications related to the device.

5.1 Chassis Specifications

Power Consumption	10 W

5.2 Power Supply Specifications

Note
When determining cable lengths, make sure the nominal input voltage for the power supply is provided at the power source.

Power Supply Type	Input Range		Internal Fuse Rating	Maximum Power Consumption[a]
	Min	Max		
Internal	11 VDC	72 VDC	6.3 A	26.4 W

[a] Power consumption varies based on the device configuration.

5.3 Failsafe Relay Specifications

Maximum Switching Voltage	Rated Switching Current	Isolation
30 VDC	2 A, 60 W	1500 V_{rms} for 1 minute between coil and contacts
125 VDC	0.24 A, 30 W	
125 VAC	0.5 A, 62.5 W	
220 VDC	0.24 A, 60 W	
250 VAC	0.25 A, 62.5 W	

5.4 Operating Environment

The RUGGEDCOM RX1512 is rated to operate under the following environmental conditions.

Note
Temperature limits for select line modules may differ from that which can be withstood by the RUGGEDCOM RX1512. Make sure the selected modules are

rated for the expected environmental conditions before deployment. For more information, refer to the "RUGGEDCOM RX1512 Series Modules Catalog".

Ambient Operating Temperature[ab]	-40 to 85 °C (-40 to 185 °F)
Ambient Storage Temperature	-40 to 85 °C (-40 to 185 °F)
Ambient Relative Humidity[c]	5% to 95%
Maximum Altitude	2000 m (6562 ft)

[a] Measured from a 30 cm (12 in) radius surrounding the center of the enclosure.
[b] Operating temperature may vary based on the limitations of installed SFPs. Refer to the "RUGGEDCOM SFP Transceivers Catalog" for SFP temperature ratings.
[c] Non-condensing.

5.5 Mechanical Specifications

Weight	Approximately 2.3 kg (5 lb)
Ingress Protection	IP30
Enclosure	Aluminum

5.6 Dimension Drawings

Note
All dimensions are in millimeters, unless otherwise stated.

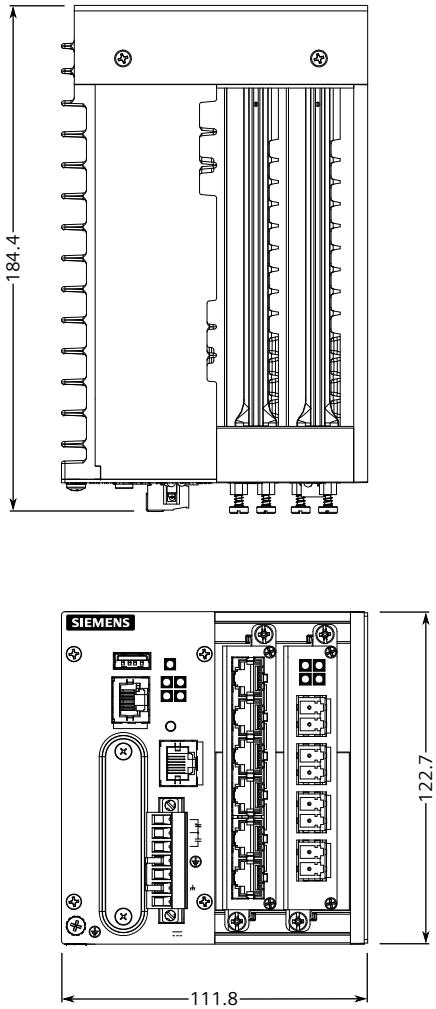

Figure 5.1 Overall Dimensions

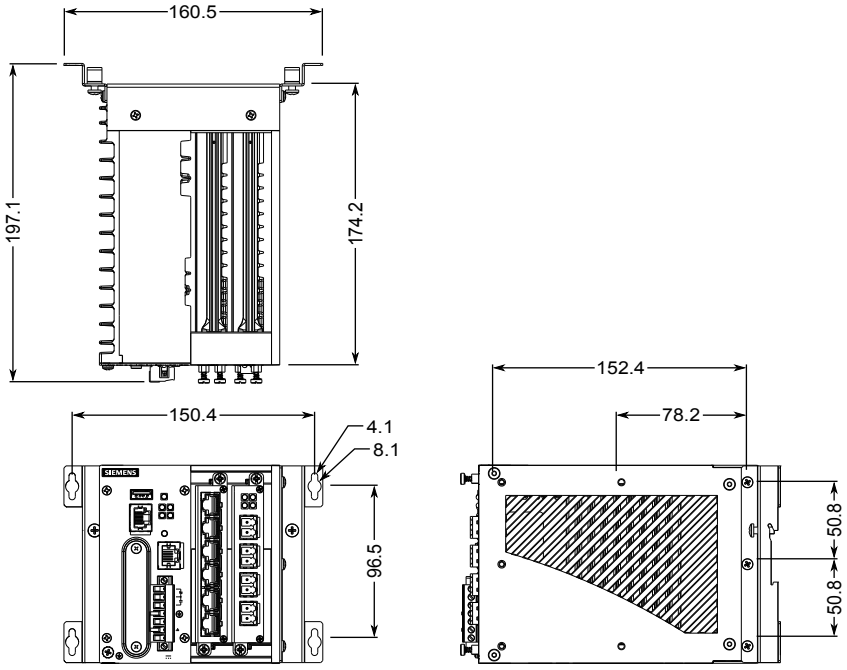

Figure 5.2 Panel and Din Rail Mount Dimensions

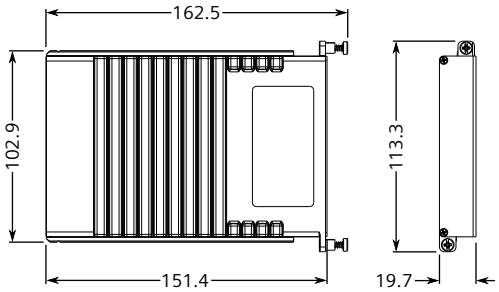

Figure 5.3 Line Module Dimensions

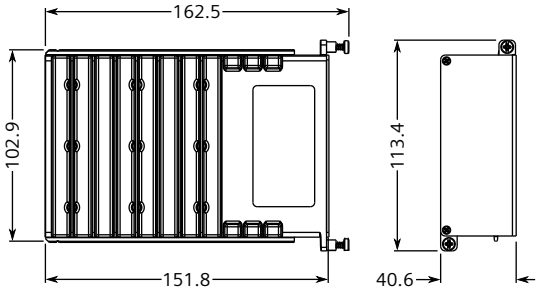

Figure 5.4 Power Module Dimensions

6 Certification

The RUGGEDCOM RX1512 device has been thoroughly tested to guarantee its conformance with recognized standards and has received approval from recognized regulatory agencies.

Note
Certifications related to individual modules are detailed in the "RUGGEDCOM Modules Catalog" for the device available online.

6.1 Approvals

This section details the standards to which the RUGGEDCOM RX1512 complies.

6.1.1 TÜV SÜD

This device is certified by TÜV SÜD to meet the requirements of the following standards:

- **CAN/CSA-C22.2 NO. 62368-1 (R2014)**

  Information Technology Equipment – Safety – Part 1: General Requirements (Bi-National standard, with UL 62368-1)

- **UL 62368-1**

  Information Technology Equipment – Safety – Part 1: General Requirements

6.1.2 European Union (EU)

This device is declared by Siemens Canada Ltd. to comply with essential requirements and other relevant provisions of the following EU directives:

- **Directive 2014/30/EU**

  Directive 2014/30/EU of the European Parliament and of the Council of 26 February 2014 on the harmonisation of the laws of the Member States relating to electromagnetic compatibility (recast) Text with EEA relevance

- **Directive 2014/35/EU**

  Directive 2014/35/EU of the European Parliament and of the Council of 26 February 2014 on the harmonisation of the laws of the Member States relating

to the making available on the market of electrical equipment designed for use within certain voltage limits Text with EEA relevance

- **Directive 2011/65/EU**

  Directive 2011/65/EU of the European Parliament and of the Council of 8 June 2011 on the restriction of the use of certain hazardous substances in electrical and electronic equipment Text with EEA relevance

- **Directive 1999/5/EC**

  Directive 1999/5/EC of the European Parliament and of the Council of 9 March 1999 on radio equipment and telecommunications terminal equipment and the mutual recognition of their conformity

- **EN 62368-1**

  Information Technology Equipment – Safety – Part 1: General Requirements

- **EN 61000-3-2**

  Electromagnetic compatibility (EMC) – Part 3-2: Limits – Limits for harmonic current emissions (equipment input current ≤ 16 A per phase)

- **EN 61000-3-3**

  Electromagnetic compatibility (EMC) – Part 3-3: Limits – Limitation of voltage changes, voltage fluctuations and flicker in public low-voltage supply systems, for equipment with rated current ≤16 A per phase and not subject to conditional connection

- **EN 61000-6-2**

  Electromagnetic Compatibility (EMC) – Part 6-2: Generic Standards – Immunity for Industrial Environments

- **EN 60825-1**

  Safety of Laser Products – Equipment Classification and Requirements

- **EN 50581**

  Technical Documentation for the Assessment of Electrical and Electronic Products with Respect to the Restriction of Hazardous Substances

- **EN 55032**

  Information Technology Equipment – Radio Disturbance Characteristics – Limits and Methods of Measurement

The device is marked with a CE marking and notified body number, and can be used throughout the European community.

CE 0680

A copy of the CE Declaration of Conformity is available from Siemens Canada Ltd.. For contact information, refer to "Contacting Siemens (Page vii)".

6.1.3 FCC

This device has been tested and found to comply with the limits for a Class A digital device, pursuant to Part 15 of the FCC Rules. These limits are designed to provide reasonable protection against harmful interference when the equipment is operated in a commercial environment.

This device generates, uses and can radiate radio frequency energy and, if not installed and used in accordance with the instruction manual, may cause harmful interference to radio communications. Operation of this equipment in a residential area is likely to cause harmful interference in which case users will be required to correct the interference at their own expense.

Note
Changes or modifications not expressly approved by the party responsible for compliance could void the user's authority to operate this device.

6.1.4 FDA/CDRH

This device meets the requirements of the following U.S. Food and Drug Administration (FDA) standard:

- Title 21 Code of Federal Regulations (CFR) – Chapter I – Sub-chapter J – Radiological Health

6.1.5 ISED

This device is declared by Siemens Canada Ltd. to meet the requirements of the following ISED (Innovation Science and Economic Development Canada) standard:

- CAN ICES-3 (A)/NMB-3 (A)

6.1.6 ISO

This device was designed and manufactured using a certified ISO (International Organization for Standardization) quality program that adheres to the following standard:

- **ISO 9001:2015**

  Quality management systems – Requirements

6.1.7 RoHS

This device is declared by Siemens Canada Ltd. to meet the requirements of the following RoHS (Restriction of Hazardous Substances) directives for the restricted use of certain hazardous substances in electrical and electronic equipment:

- **China RoHS 2**

  Administrative Measure on the Control of Pollution Caused by Electronic Information Products

A copy of the Material Declaration is available online at https://support.industry.siemens.com/cs/ww/en/view/109738831.

6.1.8 Other Approvals

This device meets the requirements of the following additional standards:

- **IEEE 1613**

  IEEE Standard Environmental and Testing Requirements for Communications Networking Devices in Electric Power Substations

- **IEC 61000-6-2**

  Electromagnetic Compatibility (EMC) – Part 6-2: Generic Standards – Immunity for Industrial Environments

- **IEC 61850-3**

  Communication Networks and Systems in Substations – Part 3: General Requirements

6.2 EMC and Environmental Type Tests

The RUGGEDCOM RX1512 has passed the following Electromagnetic Compatibility (EMC) and environmental tests.

EMC Type Test for IEC 61850-3

Test	Description		Test Levels	Severity Levels
IEC 61000-4-2	ESD	Enclosure Contact	± 8 kV	4
		Enclosure Air	± 15 kV	
IEC 61000-4-3	Radiated RFI	Enclosure Ports	20 V/m	Note[a]
IEC 61000-4-4	Burst (Fast Transient)	Signal ports	± 4 kV @ 2.5 kHz	
		DC Power Ports	± 4 kV	4
		Earth ground ports		
IEC 61000-4-5	Surge	Signal ports	± 2 kV Line-to-Ground ± 2 kV Line-to-Line	4
		DC Power Ports	± 2 kV Line-to-Ground ± 1 kV Line-to-Line	3
IEC 61000-4-6	Induced (Conducted) RFI	Signal ports	10 V	3
		DC Power Ports		
		Earth ground ports		

Test	Description		Test Levels	Severity Levels
IEC 61000-4-8	Magnetic Field	Enclosure Ports	100 A/m, continuous 1000 A/m for 1 s	Note[a]
			1000 A/m for 1 s	5
IEC 61000-4-12	Damped Oscillatory	Signal ports	2.5 kV common, 1 kV differential mode @1 MHz	3
		DC Power Ports		
IEC 61000-4-16	Mains Frequency Voltage	Signal ports	30 V Continuous 300 V for 1 s	4
		DC Power Ports		
IEC 61000-4-17	Ripple on DC Power Supply	DC Power Ports	10%	3
IEC 61000-4-29	Voltage Dips and Interrupts	DC Power Ports	30% for 0.1 s 60% for 0.1 s 100% for 0.05 s	
IEC 60255-5	Dielectric Strength	Signal ports	2 kV (Failsafe Relay output)	
		DC Power Ports	2 kV	
	HV Impulse	Signal ports	5 kV (Failsafe Relay output)	
		DC Power Ports	5 kV	

[a] Siemens-specified severity levels.

EMC Immunity Type Tests for IEEE 1613

Note
RUGGEDCOM products meet Class 1 requirements for copper Ethernet configurations and Class 2 for fiber Ethernet configurations. Class 1 allows for temporary communication loss, while Class 2 requires error-free and interrupted communications.

Description		Test Levels
HV Impulse	Signal ports	5 kV (Failsafe Relay Output)
	DC Power Ports	5 kV
Dielectric Strength	Signal ports	2 kV
	DC Power Ports	2 kV
Fast Transient	Signal ports	± 4 kV @ 2.5 kHz
	DC Power Ports	± 4 kV
	Earth ground ports	
Oscillatory	Signal ports	2.5 kV common mode @1MHz
	DC Power Ports	2.5 kV common 1 kV differential mode @ 1 MHz
Radiated RFI	Enclosure ports	35 V/m
ESD	Enclosure Contact	± 8 kV
	Enclosure Air	± 15 kV

Environmental Type Tests

Test	Description		Test Levels	Severity Levels
IEC 60068-2-1	Cold Temperature	Test Ad	-40 °C (-40 °F), 16 Hours	
IEC 60068-2-2	Dry Heat	Test Bd	85 °C (185 °F), 16 Hours	
IEC 60068-2-30	Humidity (Damp Heat, Cyclic)	Test Db	95% (non-condensing), 55 °C (131 °F), 6 cycles	
IEC 60255-21-1	Vibration		2 g @ 10-150 Hz	Class 2
IEC 60255-21-2	Shock		30 g @ 11 ms	Class 2
	Bump		10 g @ 16 ms	Class 1
IEC 60255-21-3	Seismic		Method A	Level 2

For more information

Siemens RUGGEDCOM
https://www.siemens.com/ruggedcom

Industry Online Support (service and support)
https://support.industry.siemens.com

Industry Mall
https://mall.industry.siemens.com

Siemens Canada Ltd.
Digital Industries
Process Automation
300 Applewood Crescent
Concord, Ontario, L4K 4E5
Canada

© 2022 Siemens Canada Ltd.
Subject to change